SERIAL DISPLAY

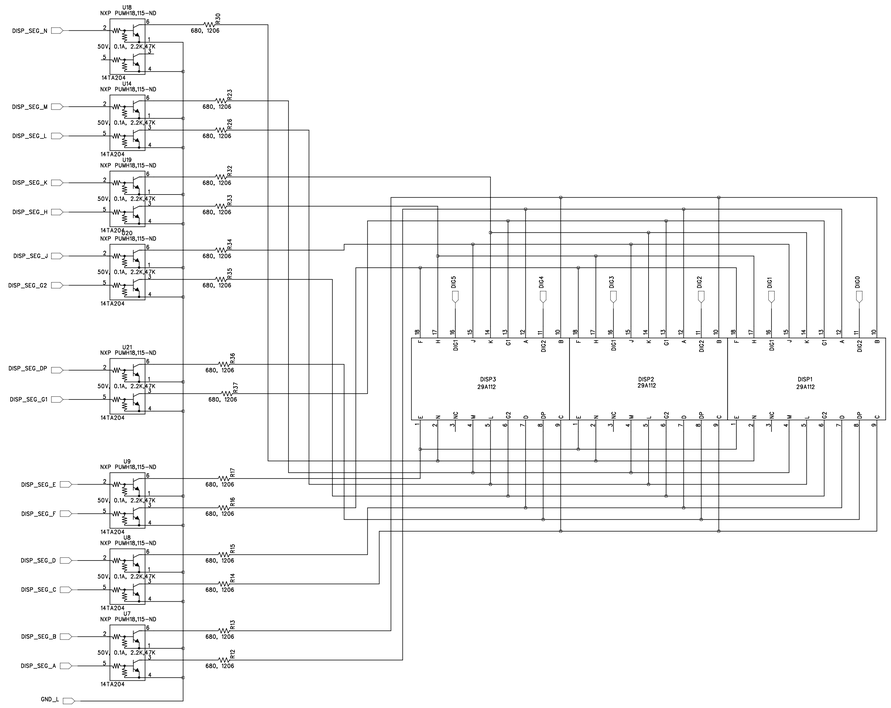

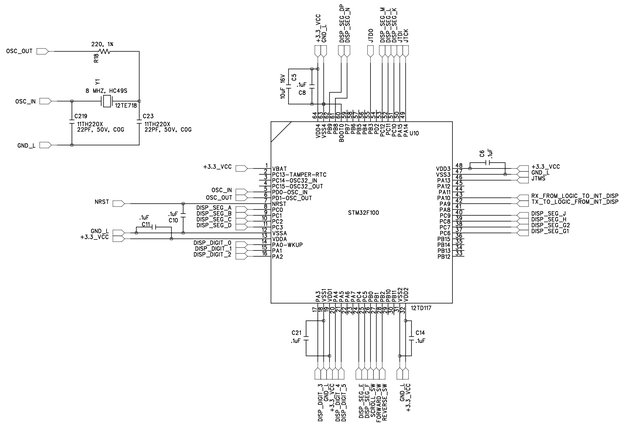

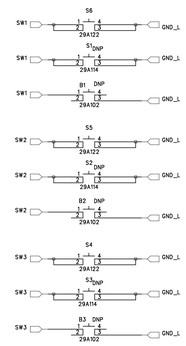

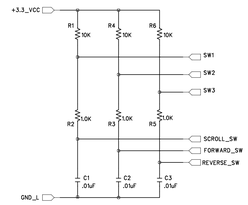

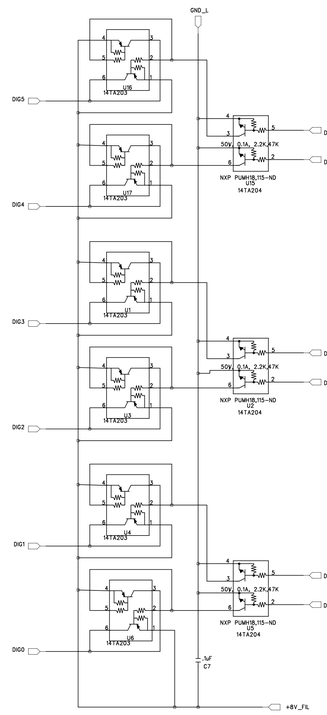

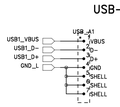

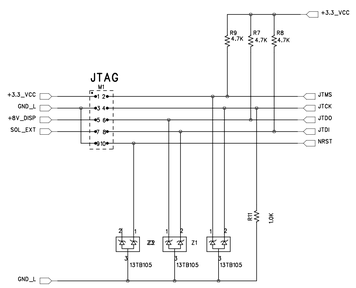

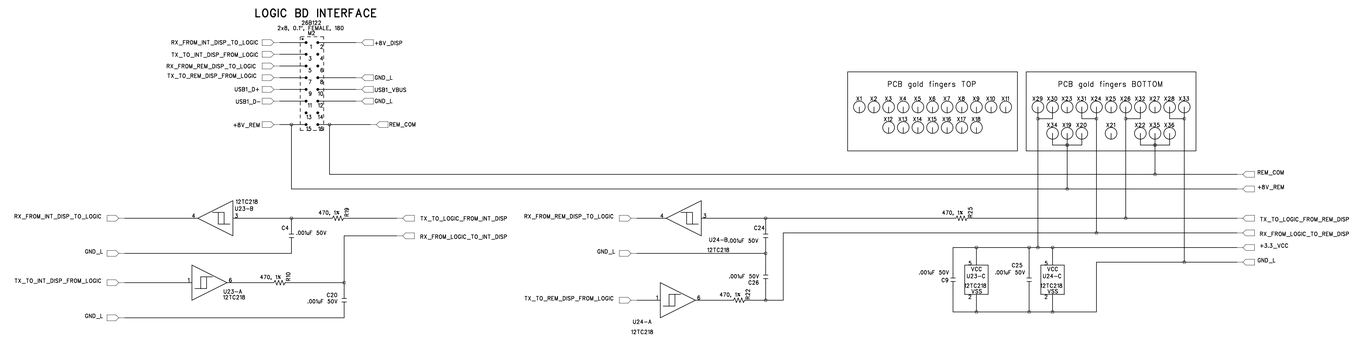

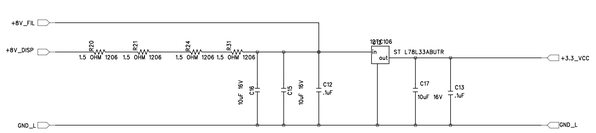

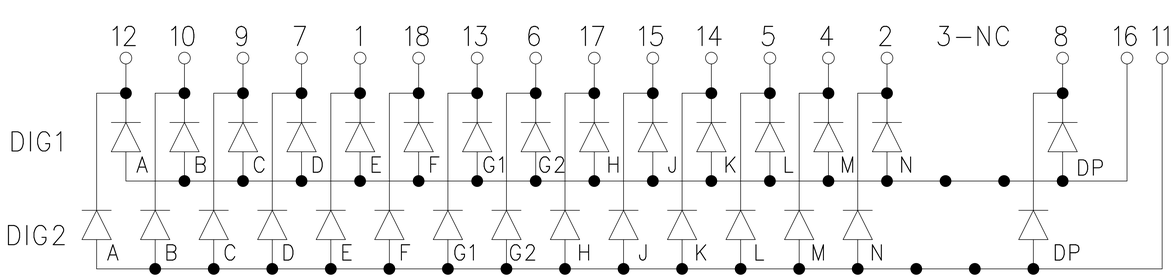

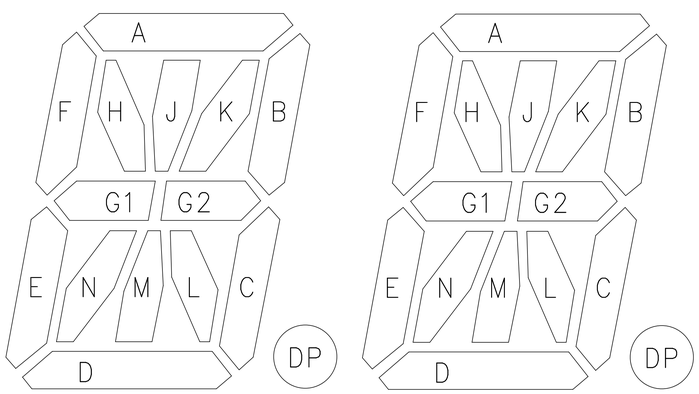

Power Electronics International, Inc.
561-B PLATE DR., EAST DUNDEE, IL 60118 U.S.A.
PH: 1-847-428-9494 FAX: 1-847-428-7744
www.PEInfo.com

(C) Copyright 2021

PE_dwg_name: 17B209.5_2021.12.01
File name: 17B209.5_2021.12.01.sch
Sheet name: DISPLAY_BOARD
Size: E
Sheet: 1 of 1